BA 946 S

- Sensing distance
  - On reflector ø 46 : 1m
  - On reflector ø 84 : 2m
- Supply : 10 / 30 VDC
- Output : PNP / NPN
- On-delay or off-delay timer standard

Description :

- Insensitivity to reflections interferences
- Simple and quick set-up for self-teach (standard and sensitive mode)
- Adjustable timer
- Alignment indicator
- Dirty optics indicator
- Keyboard lock
- Remote input for self-teach (sensitive mode)
- Direct or inverse output
- Output : PNP / NPN
- Cable or M8 plug
- Polycarbonate strong housing

Applications :

- Position or presence control of parts on conditioning machine.
- Through-beam on a conveyor.
- Detection of shiny parts.

Dimensions

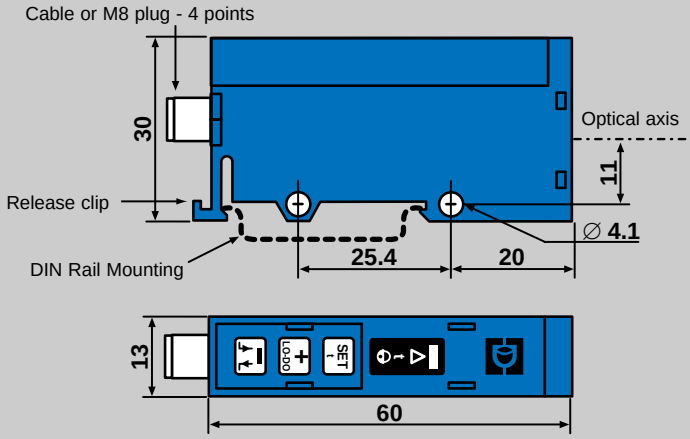

Wiring Connections

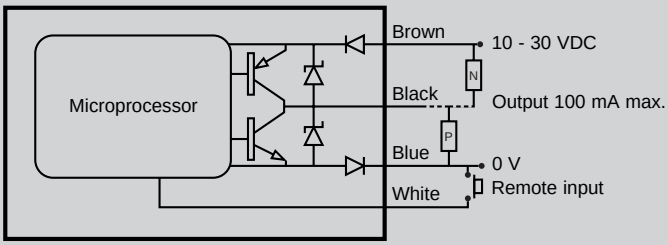

Visualisation and Keyboard

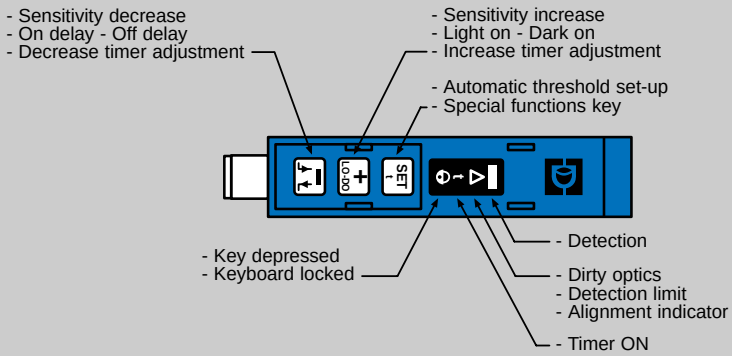

Technical Information

Supply	voltage	10 / 30 VDC ripple < 10% within specified limits
	consumption	< 40 mA
Response time	t_{on} or t_{off}	< 500 µs
	switching frequency	< 1 KHz
Output	max. nominal intensity	100 mA
	residual voltage at 100 mA	< 2 V
	residual voltage at 10 mA	< 1 V
Emission	LED	red
	modulation frequency	8 KHz
Timer	range	0 to 5 s with 11 increments
	increment duration	first increment : 40 ms, following increments : 500 ms
Temperature	operating	0 to 60 °C
	storage	-20 to 80 °C
External light immunity	incandescent light	10 000 lux
	sunlight	20 000 lux
Protections	supply	inverse polarity protection
	output	permanent short-circuit or over-load protection
	degree of protection	IP 65
Remote input	on	voltage < 1,4 V
	off	voltage > 3 V

To Place Order

Product	Retro-reflex polarised axial sensor
Reference	BA - ( ) - 946 S ( ) output with cable 2m (C0) output M8 plug without cable
Cable for M8 plug if necessary, please order together with the amplifier	CM 82 - cordon 2m CM 85 - cordon 5m

TYPES OF APPLICATIONS

Example 1

Pieces count at a conveyor output.

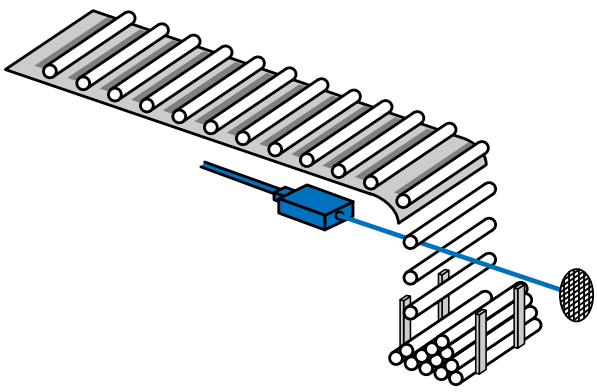

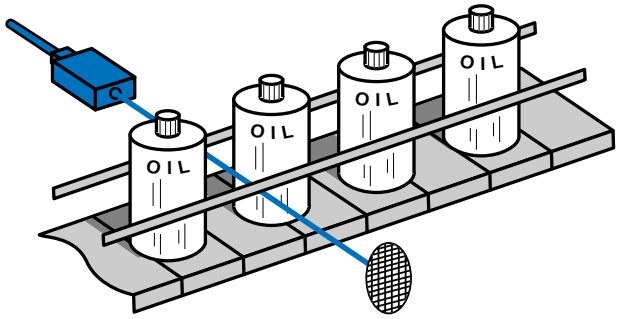

Example 2

Detection of shiny metallic cans.